Working cycle

Health | Savings | Efficiency | Environment | Safety

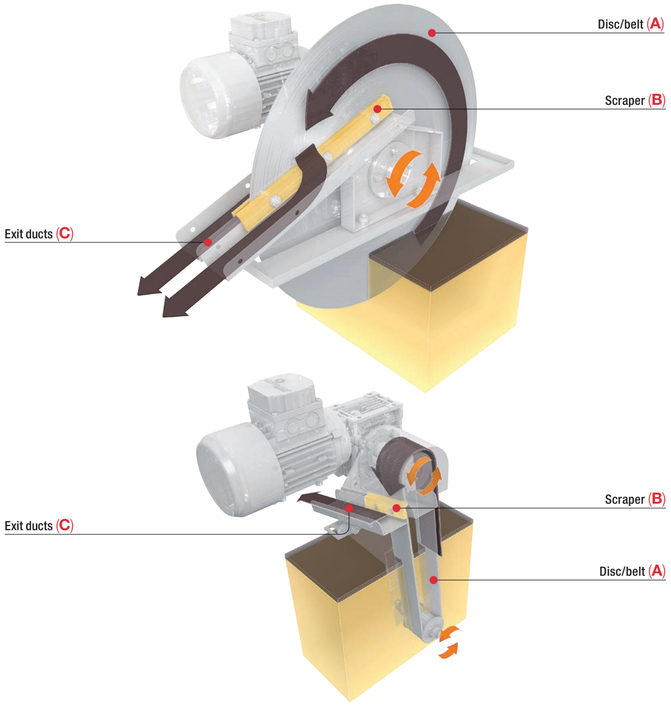

1 The disc/belt (A) is immersed into the liquid. Thanks to rotation the polluting agents stick to its surface and are dragged out.

2 During rotation the disc/belt meets two scrapers (B) fitted with a rubber rim which remove the film of polluting agents stuck to it and transport it outside by means of exit ducts (C).

3 Skim can be equipped with an electrical control board with the possibility of setting up a temporized working cycle.

Liquid filters LOSMA

newforget

LOSMA®
WORKING CLEAN, BREATHING HEALTHY

Losma SpA
HQ:
Via E. Fermi, 16 - 24035 Curno - Bergamo
Tel. +39 035 461444 - Fax +39 035 461671
info@losma.it - www.losma.it

Turin office:
Via G. Brunero, 2 - 10077 San Maurizio Canavese - Torino
Tel. +39 011 9275631
info@losma.it - www.losma.it

ISO 9001 TÜV SÜD Certified Company
ISO 14001 TÜV SÜD Certified Company
Autorizzato all'utilizzo

Losma GmbH
Albert-Einstein-Str. 2 - 70806 Kornwestheim
Tel. +49 7154 8160480 - Fax +49 7154 8160485
info@losma.de - www.losma.de

Losma Inc.
30A Wilson Drive - Sparta - NJ 07871
Tel. +973 248 0070 - Fax +973 940 0950
info@losmausa.com - www.losma.com

Losma UK Ltd.
6 Strensham Business Park
WR8 9JZ Strensham Worcestershire
Tel. +44 (0)1684 276527 - Fax +44 (0)1684 276470
info@losma.co.uk - www.losma.co.uk

Losma Pvt Ltd.
Plot No 7A, Gat. No. 63, Shindewadi
Tal: Bhor, District: Pune - 412205 - Maharashtra
Tel. +91 9226107775
info@losma.in - www.losma.com

F005.129.04

LOSMA®
WORKING CLEAN, BREATHING HEALTHY

Liquid filters | Air filters | Engineering

Skim

Eliminator of superficial oils

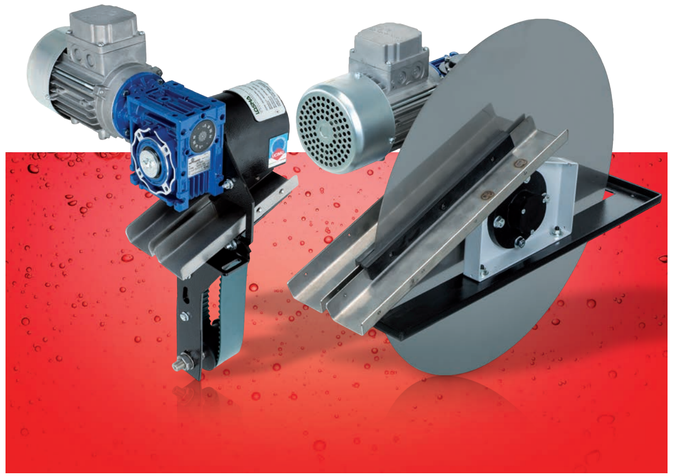

ENG

Skim

Skim is an eliminator of superficial oil, suitable to be used on every kind of basin or tank, thanks to its shape and building materials.

Skim is available in two versions: disc (Skim D) or belt (Skim N).

This last version is suitable in situations of reduced space and when the tank is not at full capacity.

Skim removes from the coolant surface the veil of light products, which do not mix with water and create a barrier and prevents air from entering into contact with the emulsion allowing the formation of anaerobic flora bacteria.

Thus the use of Skim preserves the quality of coolants and eliminates unpleasant odors.

ALL FILTERS ARE TESTED BEFORE DELIVERY

LOSMA guarantees that every single unit is individually tested through strict control procedures. Each unit is issued a test certificate for quality and function.

Skim-D

Skim-N

Technical data

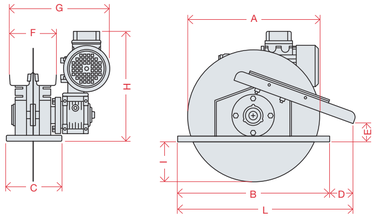

SKIM-D	Dimensions (mm)													Maximum oil suction per hour	Weight	Power (kW) 50 (Hz) / 60 (Hz)
	A	B	C	D	E	F	G	H	I	L	M	N	O	(l/h)	(Kg)	(Kg)
SK.1	350	400	150	60	50	120	280	300	80	462	374	66	13	13	15	0,12
SK.2	500	550	150	52	28	120	280	300	180	612	524	66	13	22	18	0,12
SK.3	600	650	150	78	0	120	280	300	230	740	624	66	13	35	20	0,12

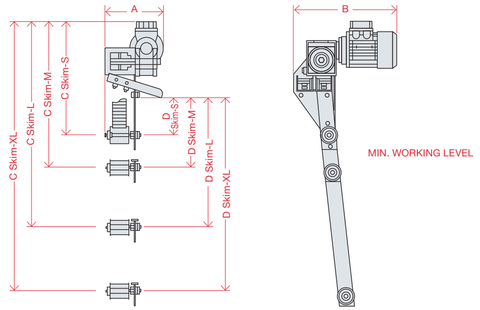

SKIM-N	Dimensions (mm)			Draught D	Weight	Power (kW) 50 (Hz) / 60 (Hz)
	A	B	C	(mm)	(Kg)	(Kg)
SK-N-S	205	356	441	126	15	0,12
SK-N-M	205	356	554	238	18	0,12
SK-N-L	205	356	982	666	20	0,12
SK-N-XL	205	356	1220	930	23	0,12

Plus

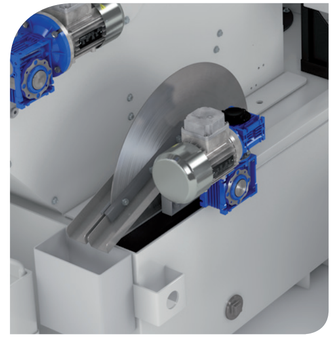

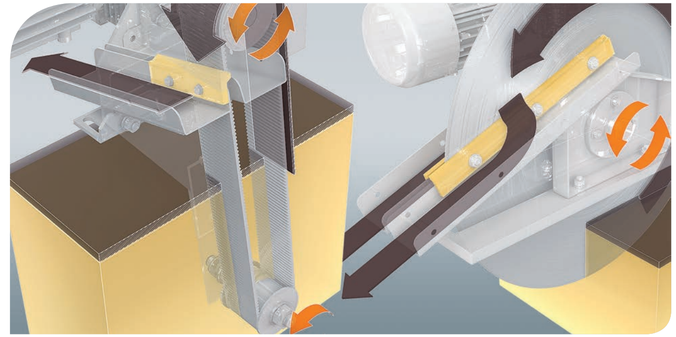

VERSATILITY AND EASY MAINTENANCE

Thanks to the wide range of accessories Skim can be mounted either on the tank edge, on the cover, encased or on an internal structure. The extreme simple construction limits the maintenance to a few simple actions. The wearing control of scrapers and the periodical cleaning of waste discharging off-lets keeps the system in perfect working conditions.